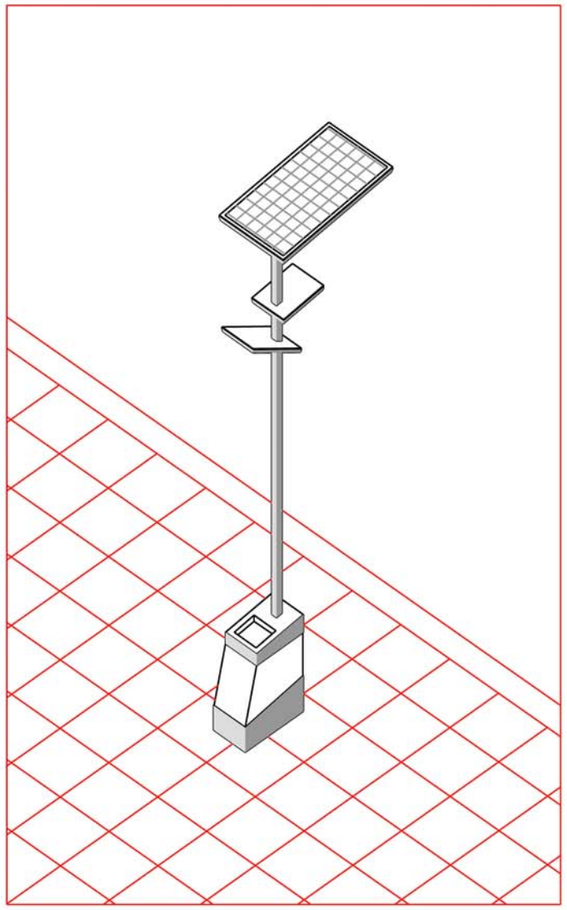

PV STREET LAMPS

design proposals

MODEL N.1

energiarchitettura

energyservicecompany

Econtek

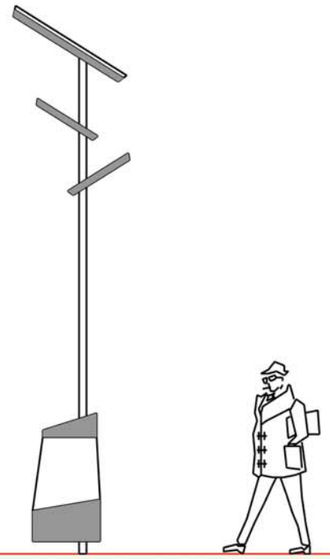

Features:
- High quality materials
- Different colours
- Integrated batteries
- Regulation of Pv exposition
- Easy maintenance

Executive design for each installation site

Optionals:
- Dimmering system
- Lcd monitors and panels for advertising
- Artistic coloured lights

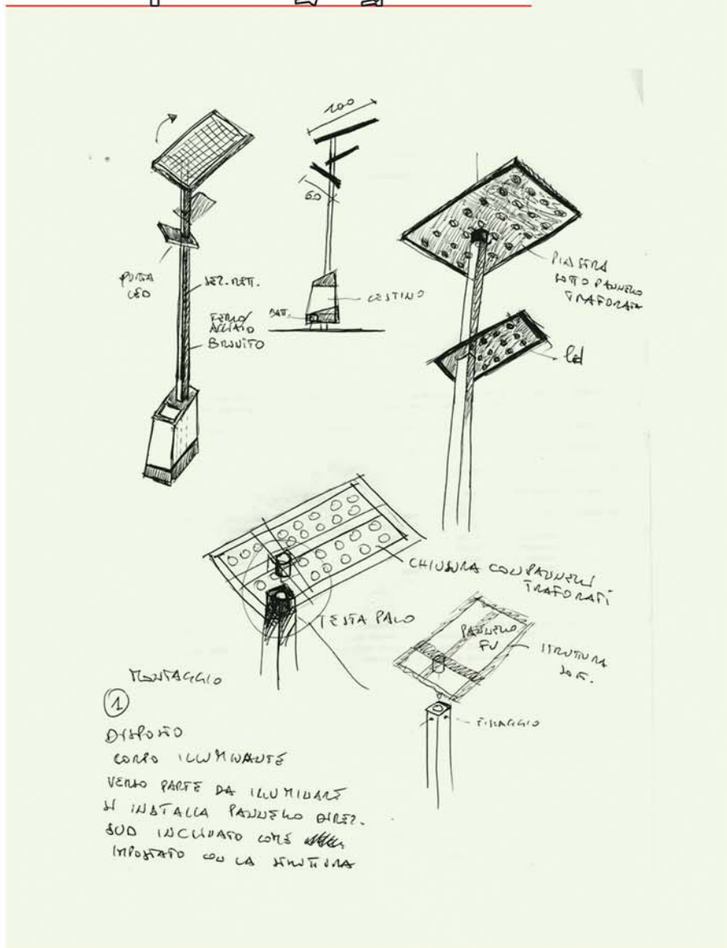

power light source

LUXEON® III Star

Introduction

LUXEON® III is a revolutionary, energy efficient and ultra compact new light source, combining the lifetime and reliability advantages of Light Emitting Diodes with the brightness of conventional lighting.

LUXEON III is rated for up to 1400mA operation, delivering increased lumens per package.

LUXEON Power Light Sources give you total design freedom and unmatched brightness, creating a new world of light.

For high volume applications, custom LUXEON power light source designs are available upon request, to meet your specific needs.

PHILIPS

LUMILEDS
LIGHT FROM SILICON VALLEY

Features

- Highest flux per LED family in the world
- Very long operating life (up to 100k hours)
- Available in 5500K white, green, blue, royal blue, cyan
- Lambertian and side emitting radiation patterns
- More energy efficient than incandescent and most halogen lamps
- Low voltage DC operated
- Cool beam, safe to the touch
- Instant light (less than 100 ns)
- Fully dimmable
- No UV
- Superior ESD protection

Typical Applications

- Reading lights (car, bus, aircraft)
- Portable (flashlight, bicycle)
- Mini-accent/Uplighters/ Downlighters/Orientation
- Fiber optic alternative/ Decorative/Entertainment
- Bollards/Security/Garden
- Cove/Undershelf/Task
- Automotive rear combination lamps
- Traffic signaling/Beacons/ Rail crossing and Wayside
- Indoor/Outdoor Commercial and Residential Architectural
- Edge-lit signs (Exit, point of sale)
- LCD Backlights/Light Guides

KYOCERA

KC85T

HIGH EFFICIENCY MULTICRYSTAL PHOTOVOLTAIC MODULE

UL LISTED

HIGHLIGHTS OF KYOCERA PHOTOVOLTAIC MODULES

Kyocera's advanced cell processing technology and automated production facilities produce a highly efficient multicrystal photovoltaic module.
The conversion efficiency of the Kyocera solar cell is over 16%.
These cells are encapsulated between a tempered glass cover and a pottant with back sheet to provide efficient protection from the severest environmental conditions.
The entire laminate is installed in an anodized aluminum frame to provide structural strength and ease of installation.

APPLICATIONS

- Microwave / Radio repeater stations
- Electrification of villages in remote areas
- Medical facilities in rural areas
- Power source for summer vacation homes
- Emergency communication systems
- Water quality and environmental data monitoring systems
- Navigation lighthouses, and ocean buoys
- Pumping systems for irrigation, rural water supplies and livestock watering
- Aviation obstruction lights
- Cathodic protection systems
- Desalination systems
- Recreational vehicles
- Railroad signals
- Sailboat charging systems
- etc.

QUALIFICATIONS

- MODULE : UL1703 certified
  Hazardous Locations Class I, Div 2, Groups A, B, C and D
- FACTORY : ISO9001 and ISO 14001

QUALITY ASSURANCE

Kyocera multicrystal photovoltaic modules have passed the following tests.

- Thermal cycling test
- Thermal shock test
- Thermal / Freezing and high humidity cycling test
- Electrical isolation test
- Hail impact test
- Mechanical, wind and twist loading test
- Salt mist test
- Light and water-exposure test
- Field exposure test